YANMAR

PARTS CATALOG

0CW10-M47200EN

Last update Mar., 2016

PREFACE

1. This parts catalog is the 1st edition of 3TNV84T-BGKM for KOHLER.

Pub.No. : 0CW10-G47200
Published : October, 2011

2. Model name

Engine model	Vehicle	Vehicle made by
3TNV84T-BGKM	GENERATOR	KOHLER

Contents

0CW10-M47200

Fig. No.	Fig. Name
3TNV84T-BGKM	
1.	CYLINDER BLOCK
2.	GEAR HOUSING
3.	MOUNTING FLANGE & OIL SUMP
4.	CYLINDER HEAD & BONNET
5.	SUCTION MANIFOLD & SILENCER
6.	CAMSHAFT & DRIVING GEAR
7.	TURBINE
8.	CRANKSHAFT & PISTON
9.	LUB. OIL SYSTEM
10.	LUB. OIL LINE
11.	COOLING FRESH WATER SYSTEM
12.	COOLING SEA WATER SYSTEM
13.	COOLING FRESH WATER COOLER
14.	FUEL INJECTION PUMP
15.	GOVERNOR
16.	FUEL INJECTION VALVE
17.	FUEL LINE
18.	STARTING MOTOR
19.	GASKET SET

Fig. No.	Fig. Name

0CW10-M47200 3TNV84T-BGKM

Fig.1. CYLINDER BLOCK

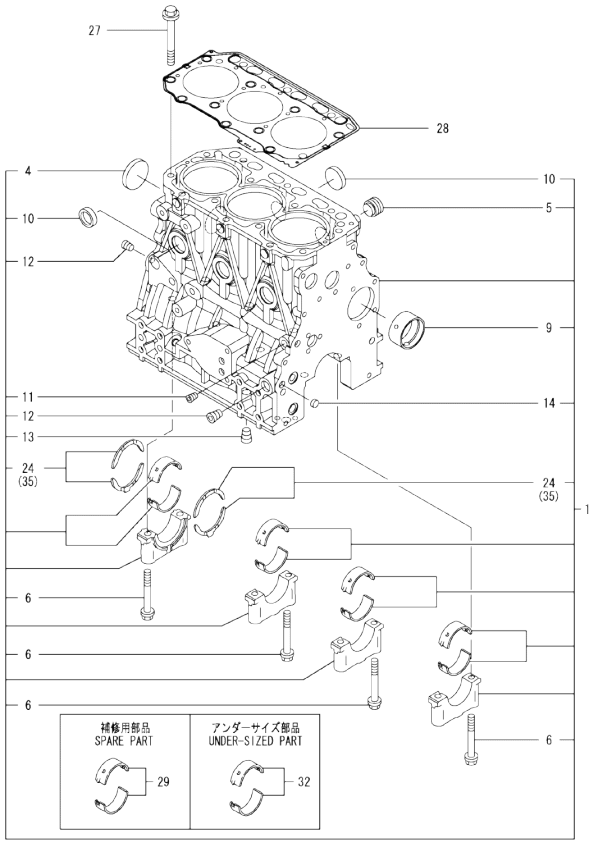

Remarks
(1)Spare part.
(2)Under-sized(U.S.=0.25)part.
(3)Over-sized(O.S.=0.25)part.

0CW10-M47200 Fig.1

(A)=3TNV84T-BGKM (D)=
(B)= (E)=
(C)= (F)=

No.	Lev.	Parts No.	Description	Q'ty (A)	(B)	(C)	(D)	(E)	(F)	I	R
1	1	729006-01560	BLOCK ASSY, CYLINDER	1							
4	2	129001-01250	PLUG, 50	1							
5	2	171051-01921	PLUG, NPTF1	1							
6	2	129150-02020	BOLT, METAL CAP	8							
9	2	129795-02412	BUSH, CAMSHAFT	1							
10	2	27241-300000	PLUG 30	6							
11	2	124060-01050	PLUG, PT1/8	1							
12	2	124160-01910	PLUG, PT1/4	2							
13	2	124160-01910	PLUG, PT1/4	1							
14	2	27241-120000	PLUG, 12	2							
24	2	129150-02931	BEARING, THRUST	2							
27	1	129150-01200	BOLT, HEAD	14							
28	1	129002-01331	GASKET, HEAD	1							
29	2	129001-02931	BEARING, MAIN	4							1
32	1	129150-02871	BEARING, 0.25 US	4							2
35	1	129150-02941	BEARING, THRUST 0.25	1							3

N:Old ◄Yes/No► New. Q:Old ◄No/Yes► New. R:Old ◄Yes/Yes► New. S:Old ◄No/No► New. W:Add. Z:Discontinued. F:Interchangeable by set. K:Q'ty Change

Copyright (C) YANMAR CO., LTD. All RightsReserved.

Fig.2. GEAR HOUSING

(A)=3TNV84T-BGKM
(B)=
(C)=
(D)=
(E)=
(F)=

No.	Lev.	Parts No.	Description	Q'ty (A)	(B)	(C)	(D)	(E)	(F)	I	R
1	1	719802-01500	CASE ASSY, GEAR	1							
3	2	23876-030000	PLUG, R03	1							
4	2	23876-040000	PLUG, R04	1							
5	2	119934-01800	SEAL, OIL	1							
6	1	129006-01520	FLANGE, GEAR CASE	1							
7	1	119802-01561	STUD, M8X25	3							
8	1	124160-01751	COVER, FILLER	1							
9	1	124240-01871	COVER	1							
10	1	129795-01950	PIPE, KNOCK L=18	2							
11	1	119609-32040	O-RING, P16	4							
12	1	119802-32100	COVER ASSY	1							
13	2	119802-32070	COVER	1							
14	2	129900-32130	VALVE, RELIEF	1							
15	2	129418-32320	SPRING	1							
16	2	129001-32330	PLUG	1							
17	1	119802-32111	ROTOR, INNER	1							
18	1	119802-32120	ROTOR, OUTER	1							
19	1	119802-32130	SCREW, M6X16	7							
20	1	129122-44480	JOINT	1							
21	1	121850-51960	O-RING	1							
22	1	24311-000320	O-RING, 1AP32.0	1							
23	1	26106-080162	BOLT, M8X 16 PLATED	4							
24	1	26106-080162	BOLT, M8X 16 PLATED	3							
25	1	26106-080552	BOLT, M8X 55 PLATED	12							
26	1	26106-080852	BOLT, M8X 85 PLATED	3							
27	1	26306-080002	NUT, M8	3							
28	1	121023-01551	COVER	1							
29	1	24341-000240	O-RING, 1AS24.0	1							
30	1	26106-060162	BOLT, M6X 16 PLATED	2							
31	1	129795-01900	STUD	1							

N:Old ◄Yes/No► New. Q:Old ◄No/Yes► New. R:Old ◄Yes/Yes► New. S:Old ◄No/No► New. W:Add. Z:Discontinued. F:Interchangeable by set. K:Q'ty Change

Copyright (C) YANMAR CO., LTD. All RightsReserved.

Fig.3. MOUNTING FLANGE & OIL SUMP

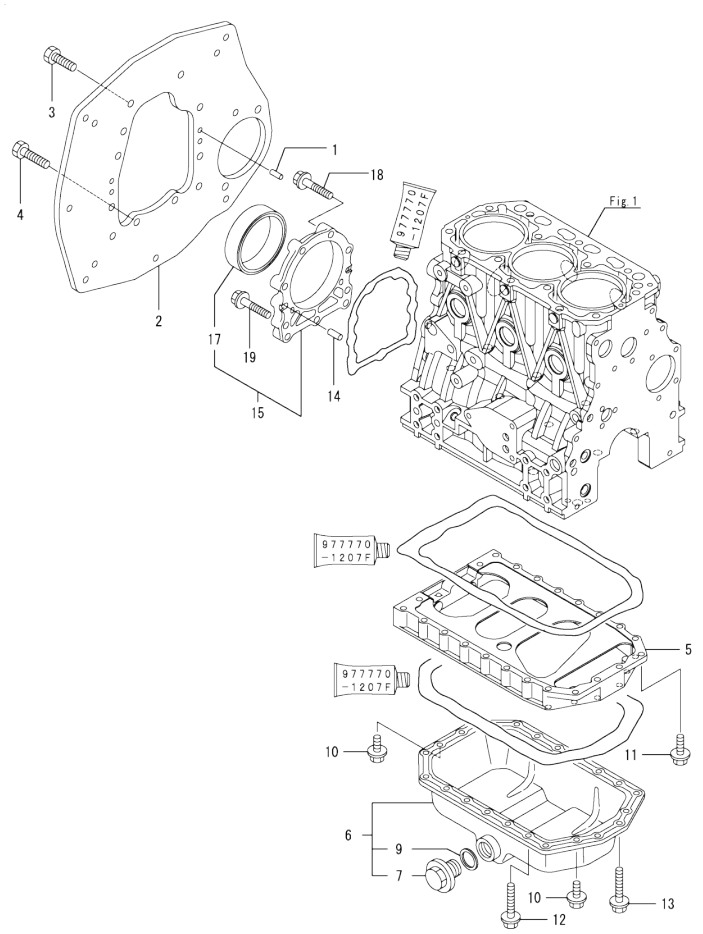

(A)=3TNV84T-BGKM (D)=
(B)= (E)=
(C)= (F)=

No.	Lev.	Parts No.	Description	Q'ty (A)	(B)	(C)	(D)	(E)	(F)	I	R
1	1	129100-01580	PIN, M8X16	2							
2	1	129176-01601	FLANGE, MOUNTING	1							
3	1	26206-100202	BOLT, M10X 20 PLATED	6							
4	1	26206-100252	BOLT, M10X 25 PLATED	4							
5	1	129100-01730	SPACER, OIL SUMP	1							
6	1	129175-01770	SUMP ASSY, OIL	1							
7	2	119640-01640	PLUG, DRAIN M22	1							
9	2	22190-220002	WASHER, SEAL 22	1							
10	1	26106-080162	BOLT, M8X 16 PLATED	4							
11	1	26106-080252	BOLT, M8X 25 PLATED	2							
12	1	26106-080452	BOLT, M8X 45 PLATED	16							
13	1	26106-080502	BOLT, M8X 50 PLATED	4							
14	1	129100-01580	PIN, M8X16	2							
15	1	129100-01640	CASE ASSY, OIL SEAL	1							
17	2	129795-01780	SEAL, OIL	1							
18	1	129486-01670	BOLT, M8X30	6							
19	1	26106-080352	BOLT, M8X 35 PLATED	3							

N:Old ←Yes/No→ New. Q:Old ←No/Yes→ New. R:Old ←Yes/Yes→ New. S:Old ←No/No→ New. W:Add. Z:Discontinued. F:Interchangeable by set. K:Q'ty Change

Copyright (C) YANMAR CO., LTD. All RightsReserved.

Fig.4. CYLINDER HEAD & BONNET

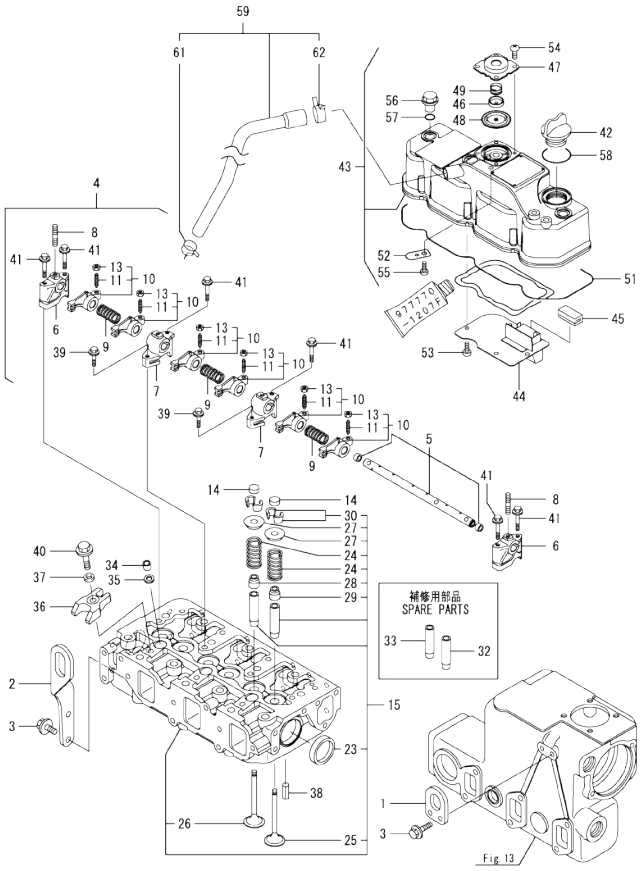

(A)=3TNV84T-BGKM (D)=
(B)= (E)=
(C)= (F)=

No.	Lev.	Parts No.	Description	Q'ty (A)	(B)	(C)	(D)	(E)	(F)	I	R
1	1	129470-07230	LIFTER	1							
2	1	129910-07900	LIFTER	1							
3	1	26106-080162	BOLT, M8X 16 PLATED	4							
4	1	129004-11241	SHAFT ASSY, ROCKER	1							
5	2	129004-11251	SHAFT, ROCKER ARM	1							
6	2	119802-11260	SUPPORT, ROCKER ARM	2							
7	2	119802-11270	SUPPORT, ROCKER ARM	2							
8	2	119802-11280	STUD	3							
9	2	129150-11280	SPRING	3							
10	2	129004-11650	ARM, ROCKER	6							
11	3	129150-11230	SCREW, VALVE ADJUST	6							
13	3	129150-11750	NUT, M8	6							
14	1	129150-11370	CAP, VALVE	6							
15	1	129009-11710	HEAD ASSY, CYLINDER	1							
23	2	27241-400000	PLUG, 40	2							
24	2	129795-11120	SPRING, VALVE	6							
25	2	129004-11130	VALVE, INTAKE	3							
26	2	129100-11130	VALVE, EXHAUST	3							
27	2	129795-11180	RETAINER, SPRING	6							
28	2	121400-11340	SEAL, VALVE STEM	3							
29	2	124460-11340	SEAL, VALVE STEM	3							
30	2	27310-080001	COTTER, 8	6							
32	1	120130-11860	GUIDE, VALVE	3							1
33	1	129150-11810	GUIDE, VALVE	3							1
34	1	119802-11870	PROTECTOR, NOZZLE	3							
35	1	119625-11880	SEAT, NOZZLE	3							
36	1	129004-11900	RETAINER, NOZZLE	3							
37	1	120270-54410	WASHER, INJECTOR	3							
38	1	22351-060012	PIN, SPRING 6.0X12	2							
39	1	26106-080252	BOLT, M8X 25 PLATED	2							
40	1	26106-080352	BOLT, M8X 35 PLATED	3							
41	1	26106-080502	BOLT, M8X 50 PLATED	6							
42	1	124160-01751	COVER, FILLER	1							
43	1	129009-11350	BONNET ASSY, HEAD	1							
44	2	129004-03010	PLATE	1							
45	2	129150-03070	BAFFLE, BREATHER	1							
46	2	119802-03110	PLATE	1							
47	2	119802-03121	COVER, DIAPHRAGM	1							
48	2	119802-03130	DIAPHRAGM	1							
49	2	119802-03141	SPRING, DIAPHRAGM	1							
51	2	129004-11310	GASKET, BONNET	1							
52	2	129009-11340	SPRING	1							
53	2	22857-500100	SCREW, 5X10	4							
54	2	22857-500100	SCREW, 5X10	4							
55	2	22857-500100	SCREW, 5X10	1							
56	1	124160-11360	KNOB	3							
57	1	24311-000120	O-RING, 1AP12.0	3							
58	1	24311-000320	O-RING, 1AP32.0	1							
59	1	129083-03010	PIPE ASSY, BREATHER	1							
61	2	129301-03660	CLAMP 16	1							
62	2	129410-03990	CLIP	1							

Remarks
(1)Spare part.

N:Old ←Yes/No→ New. Q:Old ←No/Yes→ New. R:Old ←Yes/Yes→ New. S:Old ←No/No→ New. W:Add. Z:Discontinued. F:Interchangeable by set. K:Q'ty Change

Copyright (C) YANMAR CO., LTD. All RightsReserved.

Fig.5. SUCTION MANIFOLD & SILENCER

(A)=3TNV84T-BGKM (D)=
(B)= (E)=
(C)= (F)=

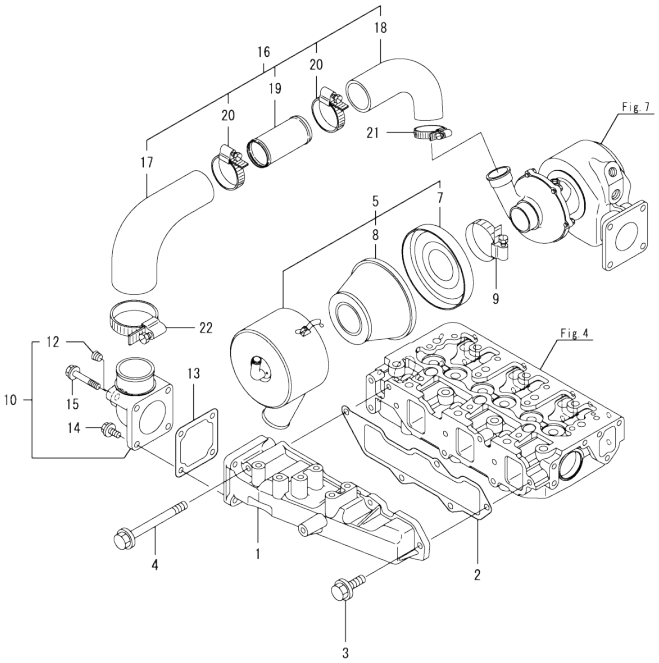

No.	Lev.	Parts No.	Description	Q'ty (A)	(B)	(C)	(D)	(E)	(F)	I	R
1	1	129006-12101	MANIFOLD, AIR INTAKE	1							
2	1	129001-12110	GASKET, MANIFOLD	1							
3	1	26106-080202	BOLT, M8X 20 PLATED	4							
4	1	26106-080802	BOLT, M8X 80 PLATED	1							
5	1	129477-12500	SILENCER ASSY	1							
7	2	129477-12530	PLATE	1							
8	2	124770-12540	ELEMENT	1							
9	1	23000-048000	CLAMP, 48	1							
10	1	129649-12210	JOINT ASSY	1							
12	2	23876-010000	PLUG, R01	1							
13	1	129150-77511	GASKET	1							
14	1	26106-080202	BOLT, M8X 20 PLATED	2							
15	1	26106-080652	BOLT, M8X 65 PLATED	2							
16	1	129046-12851	HOSE ASSY, INTAKE	1							
17	2	129649-12811	PIPE, AIR INTAKE	1							
18	2	129649-12821	PIPE, AIR INTAKE	1							
19	2	129649-12832	JOINT	1							
20	2	23000-054000	CLAMP, 54	2							
21	1	23000-048000	CLAMP, 48	1							
22	1	23000-070000	CLAMP, 70	1							

N:Old ←Yes/No→ New. Q:Old ←No/Yes→ New. R:Old ←Yes/Yes→ New. S:Old ←No/No→ New. W:Add. Z:Discontinued. F:Interchangeable by set. K:Q'ty Change

Copyright (C) YANMAR CO., LTD. All RightsReserved.

Fig.6. CAMSHAFT & DRIVING GEAR

(A)=3TNV84T-BGKM (D)=
(B)= (E)=
(C)= (F)=

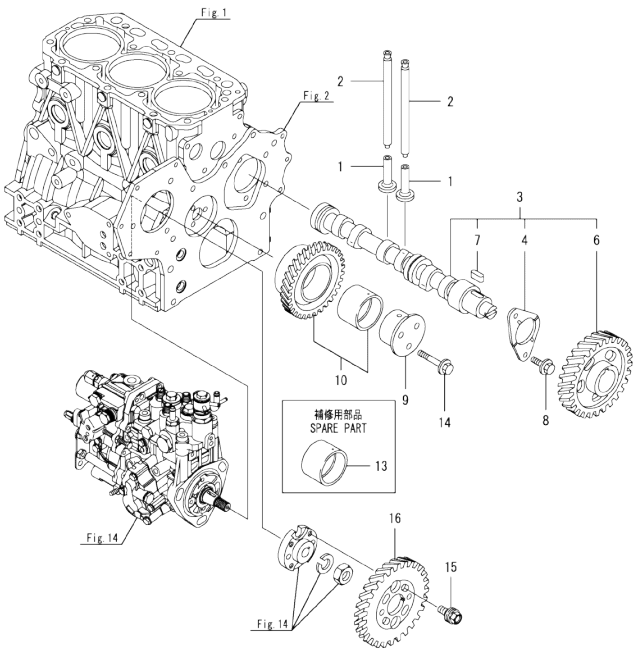

No.	Lev.	Parts No.	Description	Q'ty (A)	(B)	(C)	(D)	(E)	(F)	I	R
1	1	129150-14200	TAPPET	6							
2	1	129150-14400	ROD, PUSH L=178	6							
3	1	129004-14580	CAMSHAFT ASSY	1							
4	2	129150-02450	BEARING, THRUST	1							
6	2	129150-14101	GEAR, CAMSHAFT	1							
7	2	22512-070140	KEY, 7X 14	1							
8	1	26106-080142	BOLT, M8X 14 PLATED	2							
9	1	119802-25051	SHAFT, IDLE	1							
10	1	119802-25101	GEAR ASSY, IDLE	1							
13	1	119802-25071	BUSH, IDLE GEAR	1							1
14	1	26106-080402	BOLT, M8X 40 PLATED	3							
15	1	129150-25301	BOLT	4							
16	1	119802-25901	GEAR, PUMP	1							

Remarks
(1)Spare part.

N:Old ←Yes/No→ New. Q:Old ←No/Yes→ New. R:Old ←Yes/Yes→ New. S:Old ←No/No→ New. W:Add. Z:Discontinued. F:Interchangeable by set. K:Q'ty Change

Copyright (C) YANMAR CO., LTD. All RightsReserved.

Fig.7. TURBINE

(A)=3TNV84T-BGKM
(B)=
(C)=
(D)=
(E)=
(F)=

No.	Lev.	Parts No.	Description	Q'ty (A)	(B)	(C)	(D)	(E)	(F)	I	R
1	1	129472-13520	GASKET	1							
2	1	129579-13551	ELBOW	1							
3	1	26703-080002	NUT, M8	4							
4	1	128170-13600	STUD, M8X31	3							
5	1	129579-18010	TURBOCHARGER ASSY	1							
6	2	129403-18720	PROTECTOR, HEAT	1							
7	2	129579-18780	HOUSING ASSY	1							
8	2	129403-18800	HOUSING ASSY,BEARING	1							
11	2	129579-18820	PLATE ASSY, SEAL	1							
12	2	129579-18830	OVERHAUL KIT	1							1
13	2	129579-18850	ROTOR ASSY, TURBO	1							
14	2	129579-18860	HOUSING ASSY, TURBO	1							
14A	2	129403-18570	WHEEL	1							
15	1	129792-18091	GASKET	1							
16	1	104407-44480	JOINT	1							
17	1	129670-49290	COCK ASSY, R1/8	1							
20	1	171007-49400	JOINT	1							
21	1	26703-080002	NUT, M8	4							

Remarks
(1)Overhaul kit.

N:Old ←Yes/No→ New. Q:Old ←No/Yes→ New. R:Old ←Yes/Yes→ New. S:Old ←No/No→ New. W:Add. Z:Discontinued. F:Interchangeable by set. K:Q'ty Change

Copyright (C) YANMAR CO., LTD. All RightsReserved.

Fig.8. CRANKSHAFT & PISTON

(A)=3TNV84T-BGKM
(B)=
(C)=
(D)=
(E)=
(F)=

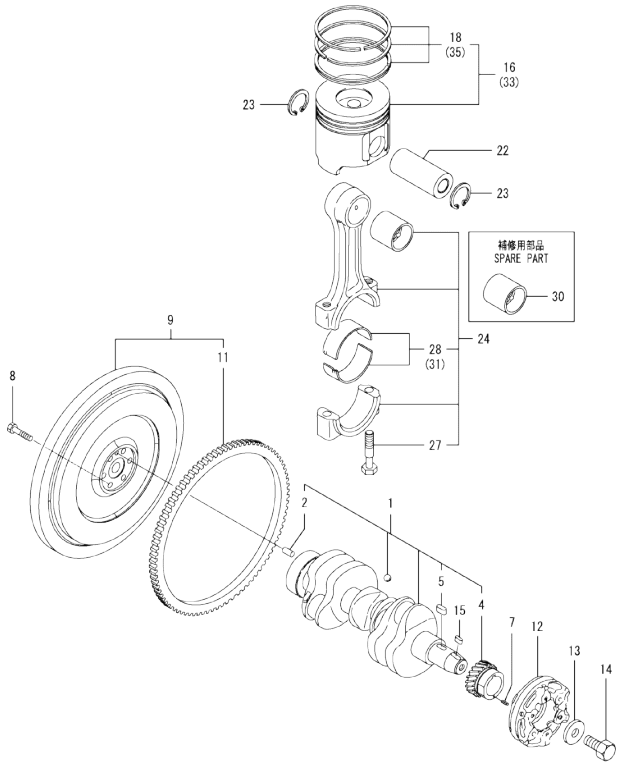

No.	Lev.	Parts No.	Description	Q'ty (A)	(B)	(C)	(D)	(E)	(F)	I	R
1	1	129004-21002	CRANKSHAFT ASSY	1							
2	2	129100-01580	PIN, M8X16	1							
4	2	119802-21202	GEAR, CRANKSHAFT	1							
5	2	22512-070140	KEY, 7X 14	1							
7	1	22351-030010	PIN, SPRING 3.0X10	1							
8	1	121111-21501	BOLT, FLYWHEEL	6							
9	1	129189-21570	FLYWHEEL ASSY	1							
11	2	124550-21600	GEAR, RING	1							
12	1	129175-21650	V-PULLEY	1							
13	1	129795-21661	WASHER	1							
14	1	121850-21680	BOLT	1							
15	1	22512-070160	KEY, 7X 16	1							
16	1	129007-22080	PISTON ASSY	3							
18	2	129007-22500	RING SET, PISTON	3							
22	1	129202-22300	PIN, PISTON D26 L70	3							
23	1	22252-000260	RING, 26	6							
24	1	729402-23100	ROD ASSY, CONNECTING	3							
27	2	121550-23200	BOLT, CONNECTING ROD	6							
28	2	129150-23601	BEARING, CRANK PIN	3							
30	1	129100-23910	BEARING, PISTON PIN	3							1
31	1	129150-23611	BEARING, 0.25 US	3							2
33	1	129007-22900	PISTON ASSY, 0.25 OS	3							3
35	2	129007-22950	RING SET, 0.25 OS	3							3

Remarks
(1)Spare part.
(2)Under-sized(U.S.=0.25)part.
(3)Over-sized(O.S.=0.25)part.

N:Old ←Yes/No→ New. Q:Old ←No/Yes→ New. R:Old ←Yes/Yes→ New. S:Old ←No/No→ New. W:Add. Z:Discontinued. F:Interchangeable by set. K:Q'ty Change

Copyright (C) YANMAR CO., LTD. All RightsReserved.

Fig.9. LUB. OIL SYSTEM

(A)=3TNV84T-BGKM
(B)=
(C)=
(D)=
(E)=
(F)=

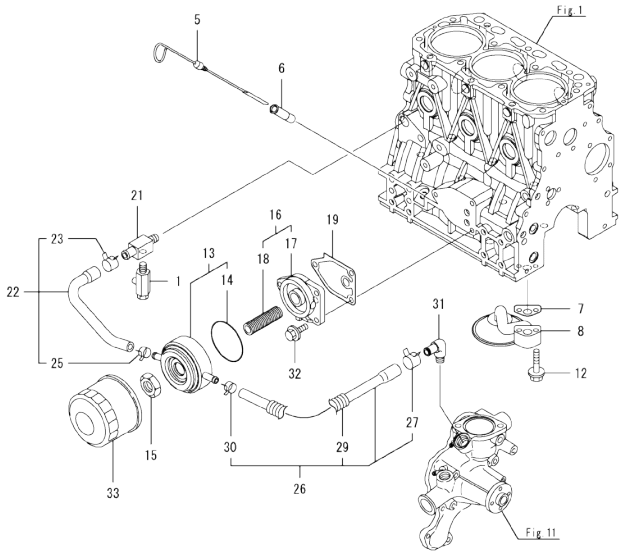

No.	Lev.	Parts No.	Description	Q'ty (A)	(B)	(C)	(D)	(E)	(F)	I	R
1	1	119620-49290	COCK ASSY, 1/4	1							
5	1	171420-34800	DIPSTICK, OIL	1							
6	1	121520-34810	GUIDE, DIPSTICK	1							
7	1	129150-35042	GASKET	1							
8	1	129150-35091	PIPE ASSY, OIL INLET	1							
12	1	26106-080352	BOLT, M8X 35 PLATED	2							
13	1	129508-33010	COOLER ASSY, OIL	1							
14	2	129508-33050	O-RING	1							
15	1	129417-33110	NUT	1							
16	1	129006-35100	BRACKET ASSY, FILTER	1							
17	2	119802-35110	BRACKET, FILTER	1							
18	2	129417-35150	STUD, L=67	1							
19	1	129150-35111	GASKET	1							
21	1	129006-44480	JOINT	1							
22	1	129508-49030	PIPE ASSY, WATER	1							
23	2	171008-03990	CLIP, HOSE 18.5	1							
25	2	23080-015000	CLAMP, 15	1							
26	1	129006-49040	PIPE ASSY, WATER	1							
27	2	171008-03990	CLIP, HOSE 18.5	1							
29	2	129642-49180	TUBE, CORRUGATED	1							
30	2	23080-015000	CLAMP, 15	1							
31	1	129466-49300	ELBOW, PT3/8	1							
32	1	26106-080202	BOLT, M8X 20 PLATED	3							
33	1	129150-35170	FILTER,LO	1							1

Remarks
(1)Spare part.

N:Old $\frac{\text{Yes}}{\text{No}}$ New. Q:Old $\frac{\text{No}}{\text{Yes}}$ New. R:Old $\frac{\text{Yes}}{\text{Yes}}$ New. S:Old $\frac{\text{No}}{\text{No}}$ New. W:Add. Z:Discontinued. F:Interchangeable by set. K:Q'ty Change

Copyright (C) YANMAR CO., LTD. All RightsReserved.

Fig.10. LUB. OIL LINE

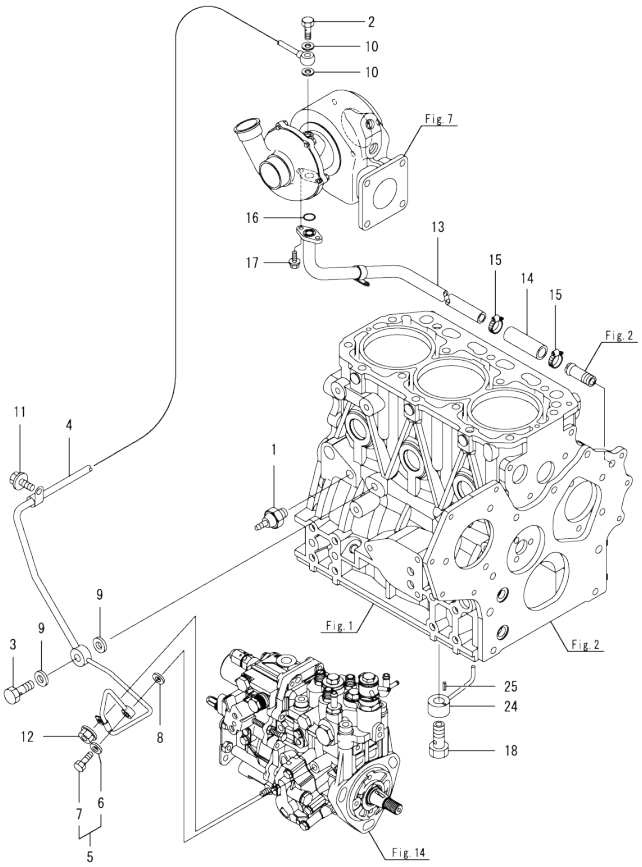

(A)=3TNV84T-BGKM (D)=
(B)= (E)=
(C)= (F)=

No.	Lev.	Parts No.	Description	Q'ty (A)	(B)	(C)	(D)	(E)	(F)	I	R
1	1	114250-39450	SWITCH, 0.5KG	1							
2	1	105010-39140	BOLT, PIPE JOINT	1							
3	1	124160-39140	BOLT, PIPE JOINT M10	1							
4	1	129046-39450	PIPE ASSY, OIL	1							
5	1	129005-59830	BOLT ASSY, JOINT M8	1							
6	2	22190-080002	WASHER, SEAL 6	1							
7	2	23857-030000	BOLT, JOINT 3	1							
8	1	22190-080002	WASHER, SEAL 6	1							
9	1	22190-100002	WASHER, SEAL 10	2							
10	1	23414-080000	GASKET, 8X1.0	2							
11	1	26106-080122	BOLT, M8X 12 PLATED	1							
12	1	26366-060002	NUT, M6	1							
13	1	129176-39610	PIPE, OIL	1							
14	1	129403-39610	JOINT, RUBBER	1							
15	1	23000-022000	CLAMP, 22	2							
16	1	24316-000160	O-RING, 4DP16.0	1							
17	1	26106-060162	BOLT, M6X 16 PLATED	2							
18	1	129792-39410	VALVE ASSY, CHECK	3							
24	1	129553-39650	NOZZLE	3							
25	1	22351-030010	PIN, SPRING 3.0X10	3							

N:Old ←Yes/No→ New. Q:Old ←No/Yes→ New. R:Old ←Yes/Yes→ New. S:Old ←No/No→ New. W:Add. Z:Discontinued. F:Interchangeable by set. K:Q'ty Change

Copyright (C) YANMAR CO., LTD. All RightsReserved.

Fig.11. COOLING FRESH WATER SYSTEM

(A)=3TNV84T-BGKM
(B)=
(C)=
(D)=
(E)=
(F)=

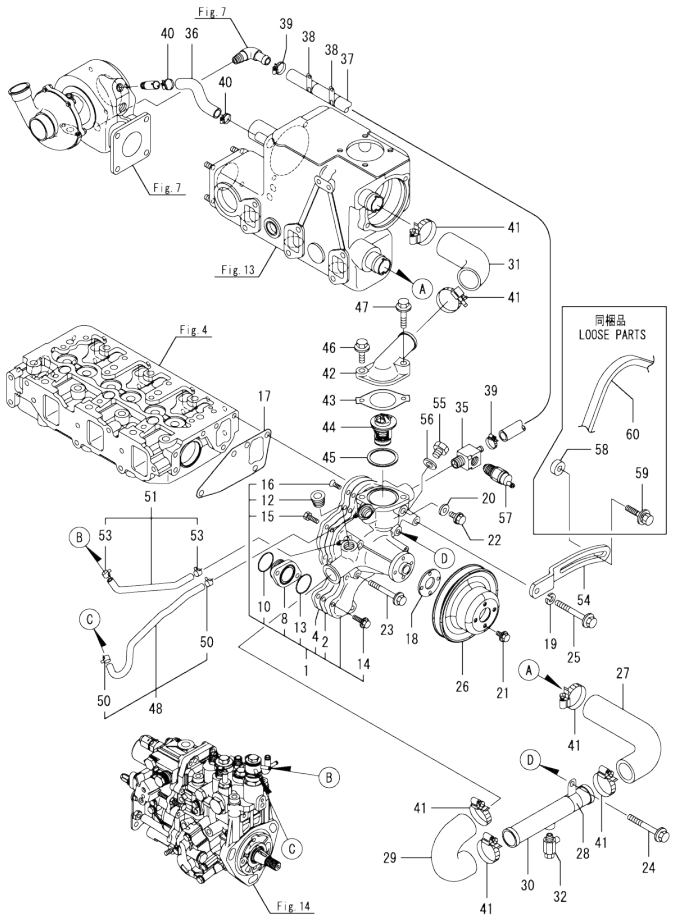

No.	Lev.	Parts No.	Description	Q'ty (A)	(B)	(C)	(D)	(E)	(F)	I	R
1	1	129247-42000	PUMP ASSY, WATER	1							
2	2	129150-42059	GASKET	1							
4	2	129263-42120	PLATE	1							
8	2	129150-42301	FLANGE	1							
10	2	129054-42320	O-RING	1							
12	2	129916-49740	PLUG, R03	2							
13	2	24358-240310	O-RING, 524031	1							
14	2	26106-060202	BOLT, M6X 20 PLATED	2							
15	2	26116-060162	BOLT, M6X 16 PLATED	3							
16	2	26577-060162	SCREW, M6X16	3							
17	1	129486-42050	GASKET, WATER PUMP	1							
18	1	129156-44760	WASHER	1							
19	1	22217-080000	WASHER, SPRING 8	1							
20	1	23414-080000	GASKET, 8X1.0	1							
21	1	26106-060102	BOLT, M6X 10 PLATED	4							
22	1	26106-080122	BOLT, M8X 12 PLATED	1							
23	1	26106-080552	BOLT, M8X 55 PLATED	2							
24	1	26106-080552	BOLT, M8X 55 PLATED	1							
25	1	26106-080652	BOLT, M8X 65 PLATED	1							
26	1	129550-42350	V-PULLEY, D=120	1							
27	1	129470-49200	JOINT, RUBBER	1							
28	1	129470-49220	RETAINER	1							
29	1	129470-49240	JOINT, RUBBER 28	1							
30	1	129470-49250	PIPE, WATER	1							
31	1	129170-49260	JOINT	1							
32	1	129670-49290	COCK ASSY, R1/8	1							
35	1	129473-49310	JOINT, PT3/8-8	1							
36	1	129579-49320	HOSE, RUBBER	1							
37	1	129171-49561	PIPE, WATER	1							
38	1	194440-51620	CLAMP	2							
39	1	23000-013000	CLAMP, 13	2							
40	1	23000-025000	CLAMP, 25	2							
41	1	23000-041000	CLAMP, 41	6							
42	1	129470-49540	COVER, THERMOSTAT	1							
43	1	129795-49551	GASKET	1							
44	1	129457-49801	THERMOSTAT, 82	1							
45	1	129150-49811	GASKET, THERMOSTAT	1							
46	1	26106-080252	BOLT, M8X 25 PLATED	1							
47	1	26106-080352	BOLT, M8X 35 PLATED	1							
48	1	129263-49610	PIPE, WATER	1							
50	2	124722-59050	CLIP, HOSE 9	2							
51	1	129263-49620	PIPE, WATER	1							
53	2	124722-59050	CLIP, HOSE 9	4							
54	1	129410-77330	ADJUSTER	1							
55	1	121450-42450	PLUG, M16	1							
56	1	124465-44950	GASKET, 16	1							
57	1	127610-91350	SWITCH, 95	1							
58	1	119940-77270	SPACER, GENERATOR	1							
59	1	119802-77340	BOLT, ADJUSTER	1							
60	1	25132-004400	V-BELT, A44	1							

N:Old ←Yes/No→ New. Q:Old ←No/Yes→ New. R:Old ←Yes/Yes→ New. S:Old ←No/No→ New. W:Add. Z:Discontinued. F:Interchangeable by set. K:Q'ty Change

Copyright (C) YANMAR CO., LTD. All RightsReserved.

Fig.12. COOLING SEA WATER SYSTEM

(A)=3TNV84T-BGKM (D)=
(B)= (E)=
(C)= (F)=

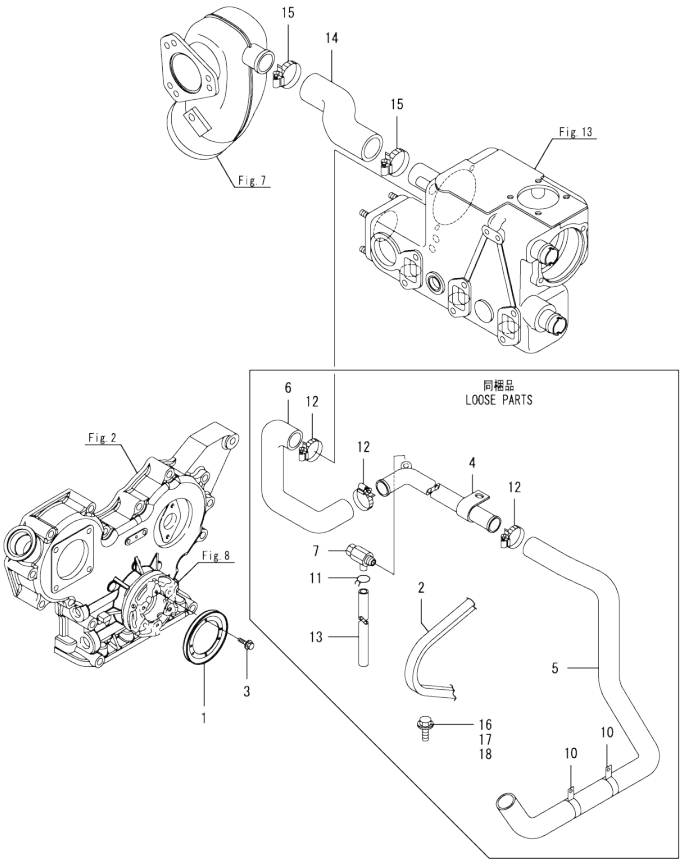

No.	Lev.	Parts No.	Description	Q'ty (A)	(B)	(C)	(D)	(E)	(F)	I	R
1	1	104407-21600	V-PULLEY	1							
2	1	104214-42780	V-BELT, HM30	1							
3	1	26106-060082	BOLT, M6X 8 PLATED	4							
4	1	129080-49010	PIPE, WATER	1							
5	1	171487-49010	PIPE, WATER	1							
6	1	129475-49020	PIPE, WATER	1							
7	1	129670-49290	COCK ASSY, R1/8	1							
10	1	129579-49460	RETAINER, D32	2							
11	1	124460-77680	RETAINER	1							
12	1	23000-035000	CLAMP, 35	3							
13	1	23061-070300	PIPE, 7X 300	1							
14	1	129472-49040	PIPE, WATER	1							
15	1	23000-035000	CLAMP, 35	2							
16	1	26106-080162	BOLT, M8X 16 PLATED	1							
17	1	26106-080602	BOLT, M8X 60 PLATED	2							
18	1	26106-080902	BOLT, M8X 90 PLATED	2							

N:Old ←Yes/No→ New. Q:Old ←No/Yes→ New, R:Old ←Yes/Yes→ New. S:Old ←No/No→ New. W:Add. Z:Discontinued. F:Interchangeable by set. K:Q'ty Change

Copyright (C) YANMAR CO., LTD. All RightsReserved.

Fig.13. COOLING FRESH WATER COOLER

(A)=3TNV84T-BGKM
(B)=
(C)=
(D)=
(E)=
(F)=

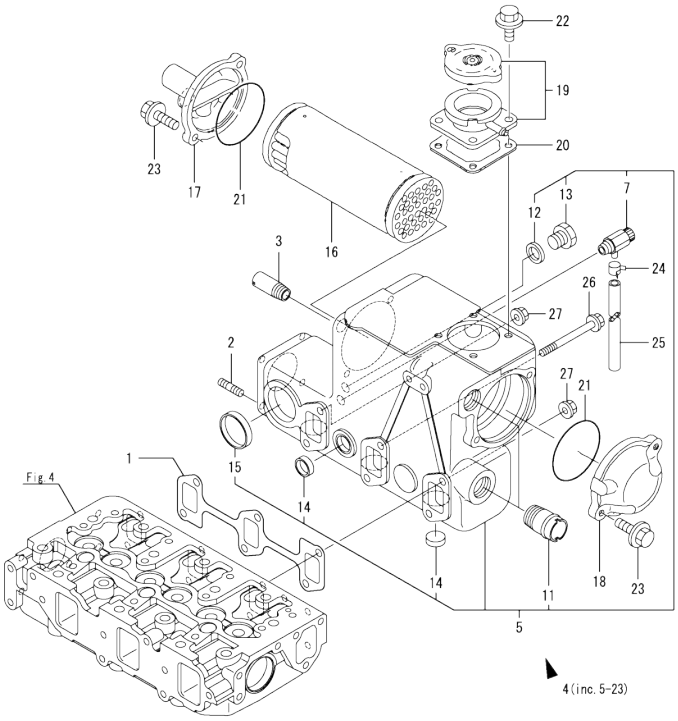

No.	Lev.	Parts No.	Description	Q'ty (A)	(B)	(C)	(D)	(E)	(F)	I	R
1	1	129150-13110	GASKET	1							
2	1	128170-13600	STUD, M8X31	4							
3	1	104407-44480	JOINT	1							
4	1	129176-44900	COOLER ASSY, WATER	1							
5	2	129176-44000	COOLER ASSY, WATER	1							
7	3	119620-49290	COCK ASSY, 1/4	1							
11	3	124160-49480	JOINT, PIPE	2							
12	3	23414-170000	GASKET, 17X1.0	1							
13	3	23894-030002	PLUG, G3/8	1							
14	3	27241-280000	PLUG, 28	7							
15	3	27241-400000	PLUG, 40	1							
16	2	129170-44110	CORE ASSY, COOLER	1							
17	2	129470-44440	COVER, A	1							
18	2	129470-44450	COVER, B	1							
19	2	129171-44600	FILLER ASSY	1							
20	2	120445-44640	GASKET	1							
21	2	24321-000750	O-RING, 1AG75.0	2							
22	2	26106-080162	BOLT, M8X 16 PLATED	4							
23	2	26106-080252	BOLT, M8X 25 PLATED	4							
24	1	124460-77680	RETAINER	1							
25	1	23061-070300	PIPE, 7X 300	1							
26	1	119802-13820	BOLT, M8X100 9.8T	4							
27	1	26306-080002	NUT, M8	2							

N:Old ←Yes/No→ New. Q:Old ←No/Yes→ New. R:Old ←Yes/Yes→ New. S:Old ←No/No→ New. W:Add. Z:Discontinued. F:Interchangeable by set. K:Q'ty Change

Copyright (C) YANMAR CO., LTD. All RightsReserved.

Fig.14. FUEL INJECTION PUMP

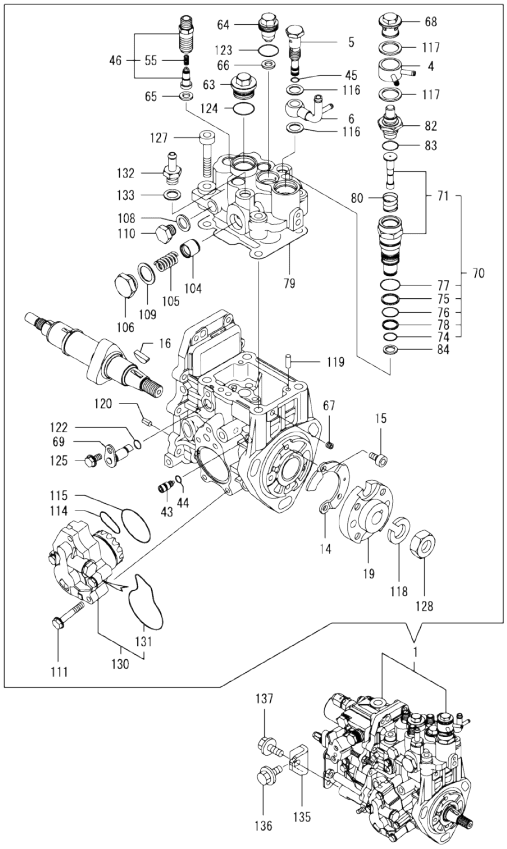

Remarks
(1)Governor(Fig.15)is incorporated in
this Fuel Injection Pump (Ref.1).

(A)=3TNV84T-BGKM
(B)=
(C)=
(D)=
(E)=
(F)=

No.	Lev.	Parts No.	Description	Q'ty (A)	(B)	(C)	(D)	(E)	(F)	I	R
1	1	729083-51320	INJECTION PUMP ASSY	1							1
4	2	158553-51551	JOINT	1							
5	2	158601-51650	JOINT, OVER FLOW	1							
6	2	158552-51670	JOINT, OVER FLOW	1							
14	2	129008-51900	COVER, GEAR CASE	1							
15	2	129008-51920	BOLT, M6X10	2							
16	2	119802-51090	KEY, 4X16	1							
19	2	158552-51151	FLANGE	1							
43	2	158600-51270	STOPPER, TAPPET	1							
44	2	158563-51281	O-RING, 4D S6	1							
45	2	158563-51281	O-RING, 4D S6	1							
46	2	129009-51390	VALVE ASSY, DELIVERY	3							
55	3	158563-51330	SPRING, DELIVERY	3							
63	2	158601-51550	PLUG	1							
64	2	119802-51560	PLUG, BARREL	1							
65	2	158552-51571	GASKET	3							
66	2	158552-51571	GASKET	1							
67	2	158557-51570	PLUG	1							
68	2	158601-51570	PLUG	1							
69	2	158552-51580	LIFTER	1							
70	2	119802-51590	TIMER SET	1							
71	3	119802-51600	TIMER ASSY	1							
74	3	158553-51670	O-RING, 1011	1							
75	3	119802-51680	RING, BACK UP	1							
76	3	119802-51690	O-RING	1							
77	3	24356-190200	O-RING, 4D19020	1							
78	3	24372-000150	RING, BACK UP T2P15	1							
79	2	158552-51600	GASKET	1							
80	2	158553-51630	SPRING, TIMER	1							
82	2	158553-51640	ELEMENT	1							
83	2	158553-51660	O-RING, P14	1							
84	2	158553-51680	GASKET	1							
104	2	158601-51770	PISTON	1							
105	2	158552-51781	SPRING	1							
106	2	158601-51790	PLUG	1							
108	2	22190-120002	WASHER, SEAL 12	1							
109	2	22190-180002	WASHER, SEAL 18	1							
110	2	158553-51930	PLUG, M12	1							
111	2	158553-51770	BOLT	4							
114	2	158552-52311	O-RING	1							
115	2	158552-52400	O-RING, 4E S42	1							
116	2	22190-120002	WASHER, SEAL 12	2							
117	2	22190-180002	WASHER, SEAL 18	2							
118	2	22217-140000	WASHER, SPRING 14	1							
119	2	22312-050140	PIN, PARALLEL M5X14	2							
120	2	22351-050010	PIN, SPRING 5.0X10	2							
122	2	24311-000070	O-RING, 1AP7.0	1							
123	2	24356-190180	O-RING, 4D19018	1							
124	2	24356-190200	O-RING, 4D19020	1							
125	2	26106-060102	BOLT, M6X 10 PLATED	1							
127	2	26450-080452	BOLT, M8X 45	4							

N:Old ←Yes/No→ New. Q:Old ←No/Yes→ New. R:Old ←Yes/Yes→ New. S:Old ←No/No→ New. W:Add. Z:Discontinued. F:Interchangeable by set. K:Q'ty Change

++ CONTINUE ++

Copyright (C) YANMAR CO., LTD. All RightsReserved.

Fig.14. FUEL INJECTION PUMP

(A)=3TNV84T-BGKM
(B)=
(C)=
(D)=
(E)=
(F)=

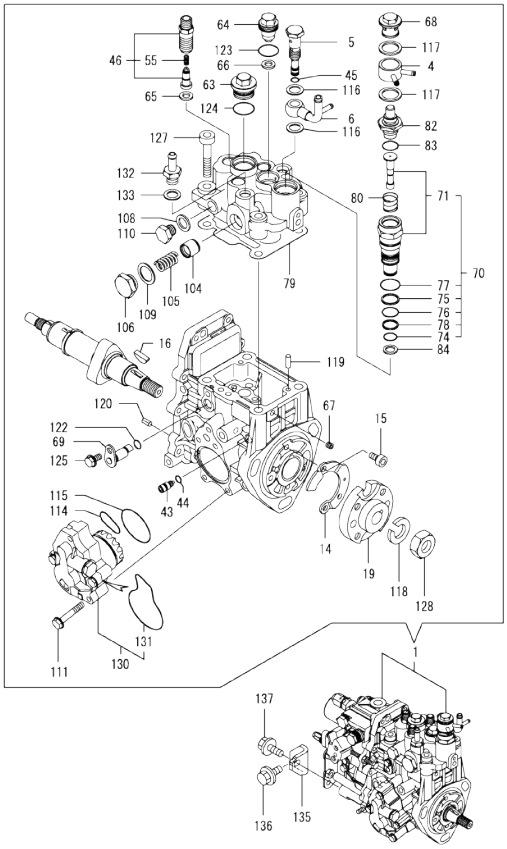

No.	Lev.	Parts No.	Description	Q'ty (A)	(B)	(C)	(D)	(E)	(F)	I	R
128	2	26776-140002	NUT, LOCK M14	1							
130	2	158552-52100	PUMP ASSY, FUEL FEED	1							
131	3	158552-52500	O-RING	1							
132	2	119934-59910	JOINT, PIPE	1							
133	2	22190-120002	WASHER, SEAL 12	1							
135	1	119802-51250	RETAINER, PUMP	1							
136	1	26106-080162	BOLT, M8X 16 PLATED	1							
137	1	26106-080202	BOLT, M8X 20 PLATED	1							

Remarks
(1)Governor(Fig.15)is incorporated in
this Fuel Injection Pump (Ref.1).

N:Old ←Yes/No→ New. Q:Old ←No/Yes→ New. R:Old ←Yes/Yes→ New. S:Old ←No/No→ New. W:Add. Z:Discontinued. F:Interchangeable by set. K:Q'ty Change

Copyright (C) YANMAR CO., LTD. All RightsReserved.

Fig.15. GOVERNOR

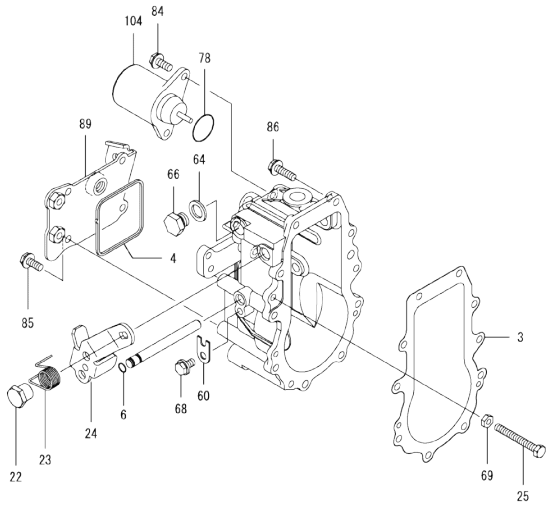

Remarks
*This figure(Governor)is incorporated
in the Fuel Injection Pump (Fig.14).

(A)=3TNV84T-BGKM (D)=
(B)= (E)=
(C)= (F)=

No.	Lev.	Parts No.	Description	Q'ty (A)	(B)	(C)	(D)	(E)	(F)	I	R
3	2	158553-61050	GASKET	1							
4	2	158553-61070	GASKET	1							
6	2	129155-51280	O-RING, S6	1							
22	2	129255-61410	NUT, LOCK	1							
23	2	119807-61420	SPRING, RETURN	1							
24	2	129246-61441	LEVER, REGULATOR	1							
25	2	129155-61460	BOLT, IDLE	1							
60	2	119660-61901	RETAINER, SHAFT	1							
64	2	22190-120002	WASHER, SEAL 12	1							
66	2	158553-51930	PLUG, M12	1							
68	2	26106-060102	BOLT, M6X 10 PLATED	1							
69	2	26756-060002	NUT, LOCK M6	1							
78	2	158552-61900	O-RING	1							
84	2	26106-060142	BOLT, M6X 14 PLATED	2							
85	2	26106-060142	BOLT, M6X 14 PLATED	4							
86	2	26106-060202	BOLT, M6X 20 PLATED	10							
89	2	129246-61061	COVER, GOVERNOR CASE	1							
104	2	119653-77950	SOLENOID, STOP	1							

N:Old ←Yes/No→ New. Q:Old ←No/Yes→ New, R:Old ←Yes/Yes→ New, S:Old ←No/No→ New, W:Add, Z:Discontinued, F:Interchangeable by set, K:Q'ty Change

Copyright (C) YANMAR CO., LTD. All RightsReserved.

Fig.16. FUEL INJECTION VALVE

(A)=3TNV84T-BGKM
(B)=
(C)=
(D)=
(E)=
(F)=

No.	Lev.	Parts No.	Description	Q'ty (A)	(B)	(C)	(D)	(E)	(F)	I	R
1	1	729642-53100	VALVE ASSY,INJECTION	3							
2	2	129640-53001	VALVE ASSY,INJECTION	3							
5	2	114250-53080	NUT, NOZZLE D16.95	3							
11	2	114250-53120	SPRING, NOZZLE	3							
12	2	114250-53130	SEAT, SPRING	3							
13	2	114250-53140	PLATE	3							
14	2	114250-53210	PIN	6							
15	2	119803-53400	SHIM SET	3							
42	1	129150-59120	RETAINER, PIPE	2							
45	2	129150-59131	BOLT, M4X14	4							
47	1	129004-59811	PIPE ASSY, INJECTION	1							
51	1	129004-59821	PIPE ASSY, INJECTION	1							
55	1	129004-59831	PIPE ASSY, INJECTION	1							
59	1	129270-59550	PIPE, FUEL	2							
60	1	119802-59570	PIPE, FUEL	1							
61	1	129270-59580	CAP	1							
62	1	23000-013000	CLAMP, 13	7							

N:Old ←Yes/No→ New. Q:Old ←No/Yes→ New. R:Old ←Yes/Yes→ New. S:Old ←No/No→ New. W:Add. Z:Discontinued. F:Interchangeable by set. K:Q'ty Change

Copyright (C) YANMAR CO., LTD. All RightsReserved.

Fig.17. FUEL LINE

(A)=3TNV84T-BGKM
(B)=
(C)=
(D)=
(E)=
(F)=

No.	Lev.	Parts No.	Description	Q'ty (A)	(B)	(C)	(D)	(E)	(F)	I	R
1	1	129004-55612	BRACKET, FILTER	1							
2	1	119802-55810	FILTER,FO	1							
3	1	26106-080302	BOLT, M8X 30 PLATED	2							
4	1	119802-59100	PIPE, FUEL	1							
5	1	119802-59110	PIPE, FUEL	1							
6	1	23000-019000	CLAMP, 19	4							
7	1	114110-07761	LABEL, FUEL OIL CAUT	1							

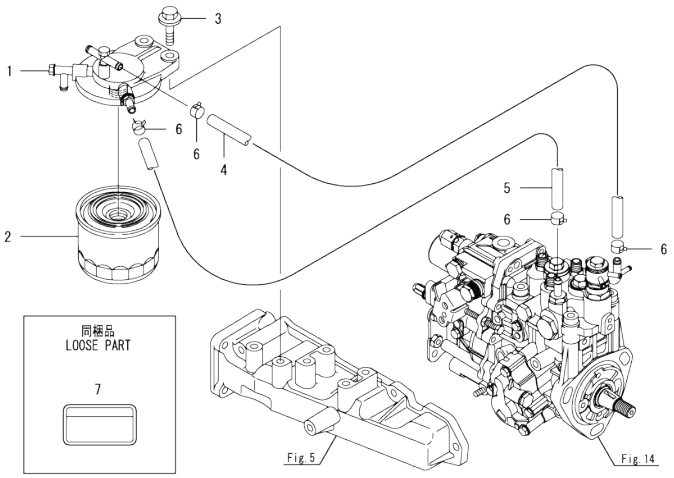

N:Old ←Yes/No→ New. Q:Old ←No/Yes→ New, R:Old ←Yes/Yes→ New. S:Old ←No/No→ New. W:Add. Z:Discontinued. F:Interchangeable by set. K:Q'ty Change

Copyright (C) YANMAR CO., LTD. All RightsReserved.

Fig.18. STARTING MOTOR

(A)=3TNV84T-BGKM
(B)=
(C)=
(D)=
(E)=
(F)=

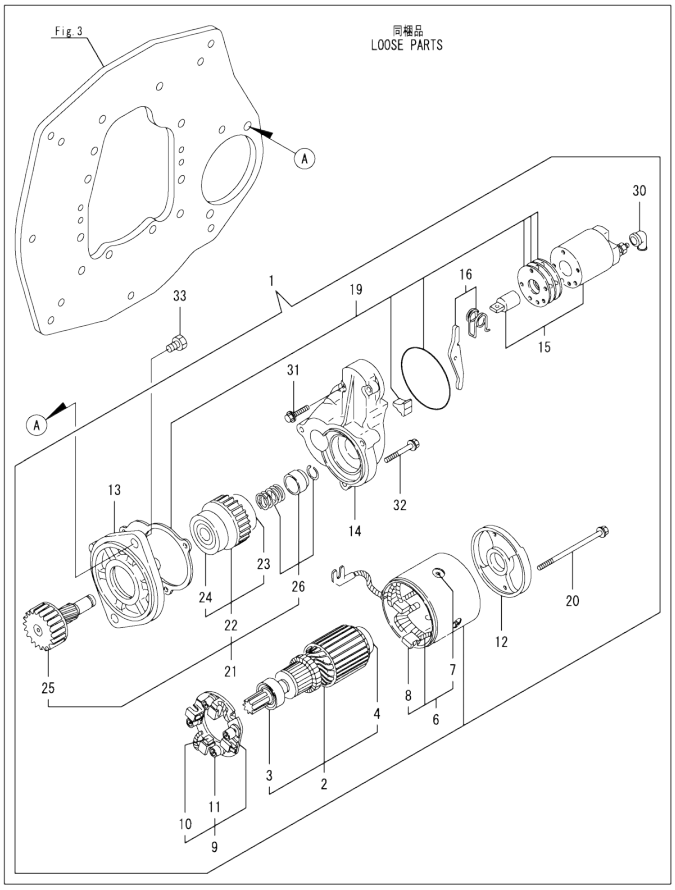

No.	Lev.	Parts No.	Description	Q'ty (A)	(B)	(C)	(D)	(E)	(F)	I	R
1	1	171008-77010	STARTER, S114-483	1							
2	2	171008-77400	ARMATURE ASSY	1							
3	3	X2114255110	BEARING, BALL	1							
4	3	X2130350900	BEARING, BALL	1							
6	2	171008-77440	COIL ASSY, FIELD	1							
7	3	171008-77450	SCREW	4							
8	3	171008-77460	BRUSH (+)	2							
9	2	171008-77470	HOLDER ASSY, BRUSH	1							
10	3	171008-77480	BRUSH (-)	2							
11	3	171008-77490	SPRING, BRUSH	4							
12	2	171008-77500	COVER, REAR	1							
13	2	171008-77510	CASE, GEAR	1							
14	2	171008-77520	HOUSING, CENTER	1							
15	2	171008-77531	SWITCH ASSY,MAGNETIC	1							
16	2	171008-77540	LEVER SET	1							
19	2	171008-77571	COVER KIT, DUST	1							
20	2	171008-77640	BOLT, THROUGH	2							
21	2	171008-77650	PINION ASSY	1							
22	3	X2114555500	CLUTCH ASSY	1							
23	4	X2114955020	BEARING, BALL	1							
24	4	X2240410100	BEARING, BALL	1							
25	3	171008-77660	SHAFT	1							
26	3	171008-77670	STOPPER SET	1							
30	2	171008-77750	COVER	1							
31	2	26106-060322	BOLT, M6X 32 PLATED	2							
32	2	26106-060402	BOLT, M6X 40 PLATED	3							
33	1	26116-120252	BOLT, M12X 25 PLATED	2							

N:Old ←Yes/No→ New. Q:Old ←No/Yes→ New, R:Old ←Yes/Yes→ New. S:Old ←No/No→ New. W:Add. Z:Discontinued. F:Interchangeable by set. K:Q'ty Change

Copyright (C) YANMAR CO., LTD. All RightsReserved.

Fig.19. GASKET SET

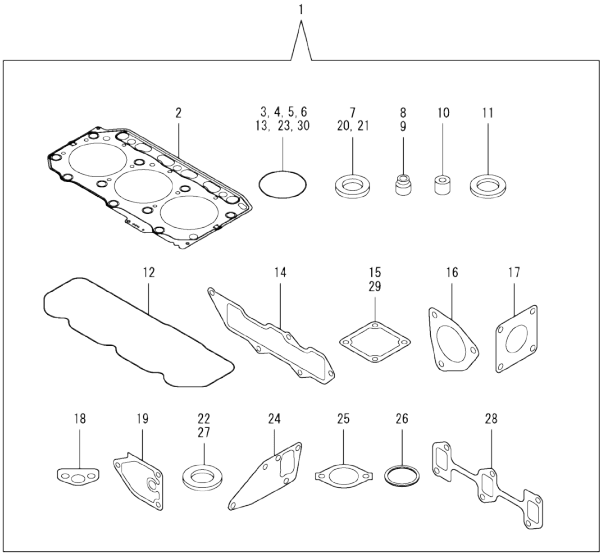

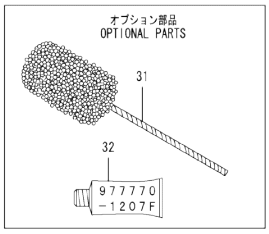

(A)=3TNV84T-BGKM (D)=
(B)= (E)=
(C)= (F)=

No.	Lev.	Parts No.	Description	Q'ty (A)	(B)	(C)	(D)	(E)	(F)	I	R
1	1	729006-92610	GASKET SET	1							1
2	2	129002-01331	GASKET, HEAD	1							
3	2	119609-32040	O-RING, P16	4							
4	2	121850-51960	O-RING	1							
5	2	24311-000320	O-RING, 1AP32.0	2							
6	2	24341-000240	O-RING, 1AS24.0	1							
7	2	22190-220002	WASHER, SEAL 22	1							
8	2	121400-11340	SEAL, VALVE STEM	3							
9	2	124460-11340	SEAL, VALVE STEM	3							
10	2	119802-11870	PROTECTOR, NOZZLE	3							
11	2	119625-11880	SEAT, NOZZLE	3							
12	2	129004-11310	GASKET, BONNET	1							
13	2	24311-000120	O-RING, 1AP12.0	3							
14	2	129001-12110	GASKET, MANIFOLD	1							
15	2	129150-77511	GASKET	1							
16	2	129472-13520	GASKET	1							
17	2	129792-18091	GASKET	1							
18	2	129150-35042	GASKET	1							
19	2	129150-35111	GASKET	1							
20	2	22190-080002	WASHER, SEAL 6	2							
21	2	22190-100002	WASHER, SEAL 10	2							
22	2	23414-080000	GASKET, 8X1.0	3							
23	2	24316-000160	O-RING, 4DP16.0	1							
24	2	129486-42050	GASKET, WATER PUMP	1							
25	2	129795-49551	GASKET	1							
26	2	129150-49811	GASKET, THERMOSTAT	1							
27	2	124465-44950	GASKET, 16	1							
28	2	129150-13110	GASKET	1							
29	2	120445-44640	GASKET	1							
30	2	24321-000750	O-RING, 1AG75.0	2							
31	1	129400-92420	HONE	1							1
32	1	977770-1207F	GASKET.LIQUID	1							1

Remarks
(1)Optional parts.

N:Old ◄Yes/No► New. Q:Old ◄No/Yes► New. R:Old ◄Yes/Yes► New. S:Old ◄No/No► New. W:Add. Z:Discontinued. F:Interchangeable by set. K:Q'ty Change

Copyright (C) YANMAR CO., LTD. All RightsReserved.

Parts No. Index

Parts No.	Fig. No.	Ref. No.
104214-42780	12	2
104407-21600	12	1
104407-44480	7	16
	13	3
105010-39140	10	2
114110-07761	17	7
114250-39450	10	1
114250-53080	16	5
114250-53120	16	11
114250-53130	16	12
114250-53140	16	13
114250-53210	16	14
119609-32040	2	11
	19	3
119620-49290	9	1
	13	7
119625-11880	4	35
	19	11
119640-01640	3	7
119653-77950	15	104
119660-61901	15	60
119802-01561	2	7
119802-03110	4	46
119802-03121	4	47
119802-03130	4	48
119802-03141	4	49
119802-11260	4	6
119802-11270	4	7
119802-11280	4	8
119802-11870	4	34
	19	10
119802-13820	13	26
119802-21202	8	4
119802-25051	6	9
119802-25071	6	13
119802-25101	6	10
119802-25901	6	16
119802-32070	2	13
119802-32100	2	12
119802-32111	2	17
119802-32120	2	18
119802-32130	2	19
119802-35110	9	17
119802-51090	14	16
119802-51250	14	135
119802-51560	14	64
119802-51590	14	70
119802-51600	14	71
119802-51680	14	75
119802-51690	14	76

Parts No.	Fig. No.	Ref. No.
119802-55810	17	2
119802-59100	17	4
119802-59110	17	5
119802-59570	16	60
119802-77340	11	59
119803-53400	16	15
119807-61420	15	23
119934-01800	2	5
119934-59910	14	132
119940-77270	11	58
120130-11860	4	32
120270-54410	4	37
120445-44640	13	20
	19	29
121023-01551	2	28
121111-21501	8	8
121400-11340	4	28
	19	8
121450-42450	11	55
121520-34810	9	6
121550-23200	8	27
121850-21680	8	14
121850-51960	2	21
	19	4
124060-01050	1	11
124160-01751	2	8
	4	42
124160-01910	1	12
		13
124160-11360	4	56
124160-39140	10	3
124160-49480	13	11
124240-01871	2	9
124460-11340	4	29
	19	9
124460-77680	12	11
	13	24
124465-44950	11	56
	19	27
124550-21600	8	11
124722-59050	11	50
		53
124770-12540	5	8
127610-91350	11	57
128170-13600	7	4
	13	2
129001-01250	1	4
129001-02931	1	29
129001-12110	5	2
	19	14

Parts No.	Fig. No.	Ref. No.
129001-32330	2	16
129002-01331	1	28
	19	2
129004-03010	4	44
129004-11130	4	25
129004-11241	4	4
129004-11251	4	5
129004-11310	4	51
	19	12
129004-11650	4	10
129004-11900	4	36
129004-14580	6	3
129004-21002	8	1
129004-55612	17	1
129004-59811	16	47
129004-59821	16	51
129004-59831	16	55
129005-59830	10	5
129006-01520	2	6
129006-12101	5	1
129006-35100	9	16
129006-44480	9	21
129006-49040	9	26
129007-22080	8	16
129007-22500	8	18
129007-22900	8	33
129007-22950	8	35
129008-51900	14	14
129008-51920	14	15
129009-11340	4	52
129009-11350	4	43
129009-11710	4	15
129009-51390	14	46
129046-12851	5	16
129046-39450	10	4
129054-42320	11	10
129080-49010	12	4
129083-03010	4	59
129100-01580	3	1
		14
	8	2
129100-01640	3	15
129100-01730	3	5
129100-11130	4	26
129100-23910	8	30
129122-44480	2	20
129150-01200	1	27
129150-02020	1	6
129150-02450	6	4
129150-02871	1	32

Parts No.	Fig. No.	Ref. No.
129150-02931	1	24
129150-02941	1	35
129150-03070	4	45
129150-11230	4	11
129150-11280	4	9
129150-11370	4	14
129150-11750	4	13
129150-11810	4	33
129150-13110	13	1
	19	28
129150-14101	6	6
129150-14200	6	1
129150-14400	6	2
129150-23601	8	28
129150-23611	8	31
129150-25301	6	15
129150-35042	9	7
	19	18
129150-35091	9	8
129150-35111	9	19
	19	19
129150-35170	9	33
129150-42059	11	2
129150-42301	11	8
129150-49811	11	45
	19	26
129150-59120	16	42
129150-59131	16	45
129150-77511	5	13
	19	15
129155-51280	15	6
129155-61460	15	25
129156-44760	11	18
129170-44110	13	16
129170-49260	11	31
129171-44600	13	19
129171-49561	11	37
129175-01770	3	6
129175-21650	8	12
129176-01601	3	2
129176-39610	10	13
129176-44000	13	5
129176-44900	13	4
129189-21570	8	9
129202-22300	8	22
129246-61061	15	89
129246-61441	15	24
129247-42000	11	1
129255-61410	15	22
129263-42120	11	4

Parts No. Index

Parts No.	Fig. No.	Ref. No.
129263-49610	11	48
129263-49620	11	51
129270-59550	16	59
129270-59580	16	61
129301-03660	4	61
129400-92420	19	31
129403-18570	7	14 A
129403-18720	7	6
129403-18800	7	8
129403-39610	10	14
129410-03990	4	62
129410-77330	11	54
129417-33110	9	15
129417-35150	9	18
129418-32320	2	15
129457-49801	11	44
129466-49300	9	31
129470-07230	4	1
129470-44440	13	17
129470-44450	13	18
129470-49200	11	27
129470-49220	11	28
129470-49240	11	29
129470-49250	11	30
129470-49540	11	42
129472-13520	7	1
	19	16
129472-49040	12	14
129473-49310	11	35
129475-49020	12	6
129477-12500	5	5
129477-12530	5	7
129486-01670	3	18
129486-42050	11	17
	19	24
129508-33010	9	13
129508-33050	9	14
129508-49030	9	22
129550-42350	11	26
129553-39650	10	24
129579-13551	7	2
129579-18010	7	5
129579-18780	7	7
129579-18820	7	11
129579-18830	7	12
129579-18850	7	13
129579-18860	7	14
129579-49320	11	36
129579-49460	12	10
129640-53001	16	2

Parts No.	Fig. No.	Ref. No.
129642-49180	9	29
129649-12210	5	10
129649-12811	5	17
129649-12821	5	18
129649-12832	5	19
129670-49290	7	17
	11	32
	12	7
129792-18091	7	15
	19	17
129792-39410	10	18
129795-01780	3	17
129795-01900	2	31
129795-01950	2	10
129795-02412	1	9
129795-11120	4	24
129795-11180	4	27
129795-21661	8	13
129795-49551	11	43
	19	25
129900-32130	2	14
129910-07900	4	2
129916-49740	11	12
158552-51151	14	19
158552-51571	14	65
		66
158552-51580	14	69
158552-51600	14	79
158552-51670	14	6
158552-51781	14	105
158552-52100	14	130
158552-52311	14	114
158552-52400	14	115
158552-52500	14	131
158552-61900	15	78
158553-51551	14	4
158553-51630	14	80
158553-51640	14	82
158553-51660	14	83
158553-51670	14	74
158553-51680	14	84
158553-51770	14	111
158553-51930	14	110
	15	66
158553-61050	15	3
158553-61070	15	4
158557-51570	14	67
158563-51281	14	44
		45
158563-51330	14	55

Parts No.	Fig. No.	Ref. No.
158600-51270	14	43
158601-51550	14	63
158601-51570	14	68
158601-51650	14	5
158601-51770	14	104
158601-51790	14	106
171007-49400	7	20
171008-03990	9	23
		27
171008-77010	18	1
171008-77400	18	2
171008-77440	18	6
171008-77450	18	7
171008-77460	18	8
171008-77470	18	9
171008-77480	18	10
171008-77490	18	11
171008-77500	18	12
171008-77510	18	13
171008-77520	18	14
171008-77531	18	15
171008-77540	18	16
171008-77571	18	19
171008-77640	18	20
171008-77650	18	21
171008-77660	18	25
171008-77670	18	26
171008-77750	18	30
171051-01921	1	5
171420-34800	9	5
171487-49010	12	5
194440-51620	11	38
22190-080002	10	6
		8
	19	20
22190-100002	10	9
	19	21
22190-120002	14	108
		116
		133
	15	64
22190-180002	14	109
		117
22190-220002	3	9
	19	7
22217-080000	11	19
22217-140000	14	118
22252-000260	8	23
22312-050140	14	119
22351-030010	8	7

Parts No.	Fig. No.	Ref. No.
22351-030010	10	25
22351-050010	14	120
22351-060012	4	38
22512-070140	6	7
	8	5
22512-070160	8	15
22857-500100	4	53
		54
		55
23000-013000	11	39
	16	62
23000-019000	17	6
23000-022000	10	15
23000-025000	11	40
23000-035000	12	12
		15
23000-041000	11	41
23000-048000	5	9
		21
23000-054000	5	20
23000-070000	5	22
23061-070300	12	13
	13	25
23080-015000	9	25
		30
23414-080000	10	10
	11	20
	19	22
23414-170000	13	12
23857-030000	10	7
23876-010000	5	12
23876-030000	2	3
23876-040000	2	4
23894-030002	13	13
24311-000070	14	122
24311-000120	4	57
	19	13
24311-000320	2	22
	4	58
	19	5
24316-000160	10	16
	19	23
24321-000750	13	21
	19	30
24341-000240	2	29
	19	6
24356-190180	14	123
24356-190200	14	77
		124
24358-240310	11	13

Parts No. Index

Parts No.	Fig. No.	Ref. No.
24372-000150	14	78
25132-004400	11	60
26106-060082	12	3
26106-060102	11	21
	14	125
	15	68
26106-060142	15	84
		85
26106-060162	2	30
	10	17
26106-060202	11	14
	15	86
26106-060322	18	31
26106-060402	18	32
26106-080122	10	11
	11	22
26106-080142	6	8
26106-080162	2	23
		24
	3	10
	4	3
	12	16
	13	22
	14	136
26106-080202	5	3
		14
	9	32
	14	137
26106-080252	3	11
	4	39
	11	46
	13	23
26106-080302	17	3
26106-080352	3	19
	4	40
	9	12
	11	47
26106-080402	6	14
26106-080452	3	12
26106-080502	3	13
	4	41
26106-080552	2	25
	11	23
		24
26106-080602	12	17
26106-080652	5	15
	11	25
26106-080802	5	4
26106-080852	2	26
26106-080902	12	18

Parts No.	Fig. No.	Ref. No.
26116-060162	11	15
26116-120252	18	33
26206-100202	3	3
26206-100252	3	4
26306-080002	2	27
	13	27
26366-060002	10	12
26450-080452	14	127
26577-060162	11	16
26703-080002	7	3
		21
26756-060002	15	69
26776-140002	14	128
27241-120000	1	14
27241-280000	13	14
27241-300000	1	10
27241-400000	4	23
	13	15
27310-080001	4	30
719802-01500	2	1
729006-01560	1	1
729006-92610	19	1
729083-51320	14	1
729402-23100	8	24
729642-53100	16	1
977770-1207F	19	32
X2114255110	18	3
X2114555500	18	22
X2114955020	18	23
X2130350900	18	4
X2240410100	18	24

Parts No.	Fig. No.	Ref. No.

Parts No.	Fig. No.	Ref. No.